TECHNICAL DATA / FEATURES

dimensions:	100x100x76
luminous flux of the LED module:	3000 lm, 2500 lm, 2000 lm, 1500 lm
luminous flux of the lamp:	2400 lm, 2000 lm, 1600 lm, 1200 lm
maximum power:	30W, 29W, 25W, 19W
nominal voltage:	12V-24V DC, 12V-48V DC
permissible power supply voltage:	10.5V-30V DC, 10.5V-60V DC
source of light:	6 x LED
colour temperature:	5000-7000K
light distribution angle:	6°
IP rating:	IP67, IP69K
work temperature:	-40°C - +80°C
housing's material:	aluminium/plastic
lens' material:	plastic
built-in connectors:	Deutsch DT
other:	protection: • against overheating • against reverse polarisation bracket made of Inox steel

ADDITIONAL INFORMATION

The lamps comply with EMC Directive 2004/108/EC. They do not emit electromagnetic interference as well as they are resistant to it's influence.
Correct polarity required.

Replacement parts:
brackets - cat. No. CAR3.50600
grip - cat. No. AR.54324
neodymium magnet ϕ89/500N (1 pc.) - cat. No. CAR4.51320

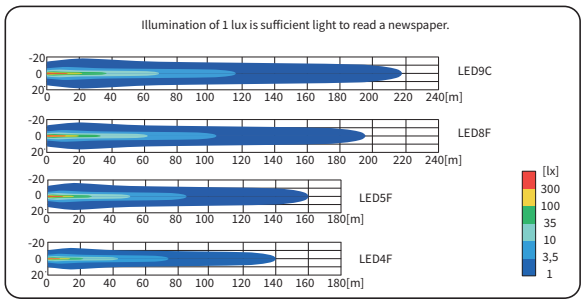

DIMENSIONS

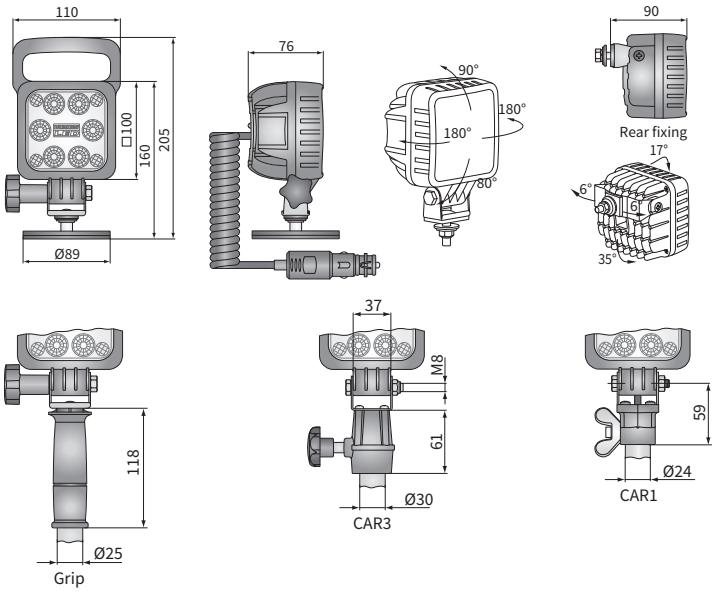

Cat. number	Luminous flux	3000 lm	2500 lm	2000 lm	1500 lm	Accessories	LED module 12V-24V	LED module 12V-48V	handle	cable 0,5 m	cable 8 m	switch	cigarette lighter plug	Mounting method	any	installed vertically up	rear	Bracket	neodymium magn.	CAR3	grip	M8	Connectors	Deutsch DT	AMP SuperSeal 1,5
LED9C.53994		✓					✓				✓	✓	✓		✓				✓						
LED9C.53995		✓					✓		✓		✓	✓	✓		✓				✓						
LED9C.53919		✓					✓		✓							✓				✓				✓	
LED9C.53925		✓					✓			✓							✓					✓			
LED9C.53987		✓					✓		✓		✓	✓	✓		✓						✓				
LED8F.51094			✓				✓				✓	✓	✓		✓				✓						
LED8F.51095			✓				✓		✓		✓	✓	✓		✓				✓						
LED8F.51040			✓				✓		✓		✓	✓	✓			✓				✓					
LED8F.51025			✓				✓			✓							✓					✓			
LED8F.51086			✓				✓				✓	✓	✓		✓						✓				

Cat. number	Luminous flux	3000 lm	2500 lm	2000 lm	1500 lm	Accessories	LED module 12V-24V	LED module 12V-48V	handle	cable 0,5 m	cable 8 m	switch	cigarette lighter plug	Mounting method	any	installed vertically up	rear	Bracket	neodymium magn.	CAR3	grip	M8	Connectors	Deutsch DT	AMP SuperSeal 1,5
LED8F.51087			✓				✓		✓		✓	✓	✓		✓						✓				
LED5F.47994				✓			✓				✓	✓	✓		✓				✓						
LED5F.47995				✓			✓		✓		✓	✓	✓		✓				✓						
LED5F.47940				✓			✓		✓		✓	✓	✓			✓				✓					
LED5F.47925				✓			✓			✓							✓					✓			
LED4F.47890					✓		✓				✓	✓	✓		✓				✓						
LED4F.47891					✓		✓		✓		✓	✓	✓		✓				✓						
LED4F.47888					✓			✓			✓	✓	✓		✓				✓						
LED4F.47889					✓			✓	✓		✓	✓	✓		✓				✓						
LED4F.47894					✓		✓		✓		✓	✓	✓			✓						✓			
LED4F.47825					✓		✓			✓							✓					✓			