TECHNICAL DATA / FEATURES

dimensions:	ϕ84x97, ϕ80x96
light functions:	daytime running
function markings:	RL
traffic:	right-hand / left-hand
source of light:	P21W
maximum power:	21W
nominal voltage:	12V-24V DC
optics:	standard, FF
IP rating:	IP66
mounting:	M8, 3 bolts, 3 screws, 3 nuts, 4 bolts
housing's material:	plastic
housing's colour:	black
lens' material:	glass
built-in connectors:	-
other:	semipermeable membrane

ADDITIONAL INFORMATION

To be mounted in factory designed locations in the front bumper recesses or to be installed in the upright position. Versions with the bracket can be installed on a vehicle in an upright or upside-down position.

Lamps with 238 homologation code have obtained E13 approval and remaining E9.

It is possible to install needed connectors on wire (on request).

Useful parts while installing:
relay 561 type - cat. No. A.09035

DIMENSIONS

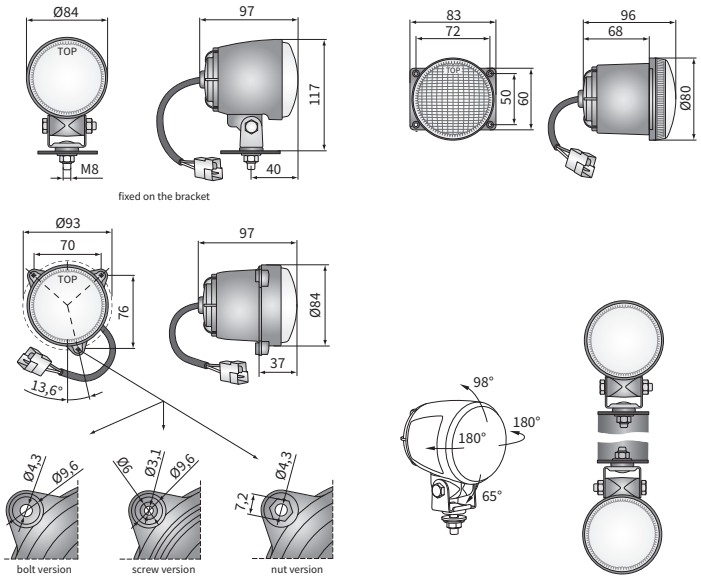

Cat. number	Homologation code	Optics	standard	FF	Diameter	ϕ84	ϕ80	Accessories	bulb P21W 12V	bulb P21W 24V	cable 0,1 m	AMP Faston connector	Mounting method	installed vertically up	suspended	in recess	Bracket	M8	3 bolts	3 screws	3 nuts	4 bolts	Side	right / left
DZ2.44500	238		✓			✓			✓		✓	✓		✓	✓			✓						✓
LOR6.41511	064			✓		✓					✓	✓		✓	✓			✓						✓
LOR6.41512	064			✓		✓			✓		✓	✓		✓	✓			✓						✓
LOR6.41533	064			✓		✓					✓	✓				✓			✓					✓
LOR6.41534	064			✓		✓			✓		✓	✓				✓			✓					✓
LOR6.41535	064			✓		✓					✓	✓				✓				✓				✓

Cat. number	Homologation code	Optics	standard	FF	Diameter	ϕ84	ϕ80	Accessories	bulb P21W 12V	bulb P21W 24V	cable 0,1 m	AMP Faston connector	Mounting method	installed vertically up	suspended	in recess	Bracket	M8	3 bolts	3 screws	3 nuts	4 bolts	Side	right / left
LOR6.41536	064			✓		✓			✓		✓	✓				✓				✓				✓
LOR6.41539	064			✓		✓				✓	✓	✓				✓				✓				✓
LOR6.41532	064			✓		✓			✓		✓	✓				✓					✓			✓
HM4.23804	238		✓				✓				✓	✓				✓						✓		✓
HM4.23800	238		✓				✓		✓		✓	✓				✓						✓		✓
HM4.23811	238		✓				✓			✓	✓	✓				✓						✓		✓